SYMBOL DEFINITION		
A DIMENSION WITHOUT AN INSPECTION REPORT SYMBOL ( ) DOES NOT REQUIRE INSPECTION. IT MAY BE CONTROLLED ON THE INDIVIDUAL COMPONENT DRAWING.	TOTAL NO OF INSPECTIONS REQUIRED	12
	LAST NO. USED	8

MISSING SYMBOLS
NO MISSING SYMBOL NUMBER

DWG STATUS					ZONE	REVISION HISTORY	AUTH	DR	APVD 1	APVD 2
DATE	STG	REV	N/P	CHG						
28FE03	R	C2	-	-		CLEARED REV COL, REDRAWN TO PD, MAT'L SPEC WAS R0100109 PBT GRA AND ADDED LOGO CONST & MAT'L RECYCLING CODE NOTES	234419	EOV	EOV	ET

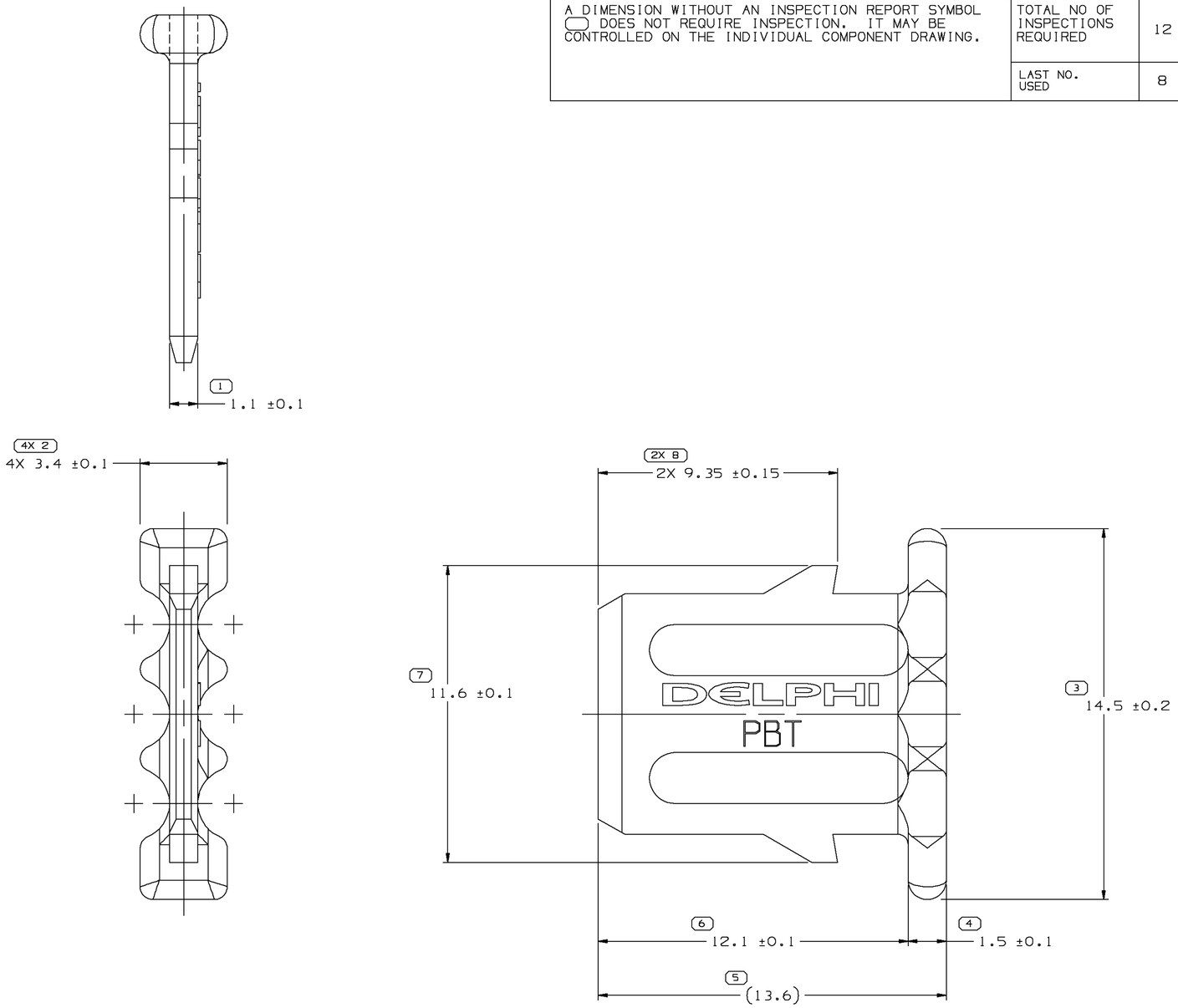

NOTES

1. UNLESS OTHERWISE SPECIFIED AND/OR INDICATED:
   DIMENSIONS ARE TO FACE OF VIEW SHOWN AND AUTOMATICALLY ROUNDED BY COMPUTER FOR INSPECTION (SEE MATH MODEL FOR PRECISE DIMENSIONS). FOR ALL OTHER DIMENSIONS NOT SHOWN BUT REQUIRED FOR TOOL BUILD, SEE MATH MODEL FOR PRECISE TOOL PATH DATA.

2. MATERIAL RECYCLING CODE >PBT< PER SAE J1344. (2.3)X(0.1) RAISED CHARACTERS AS SHOWN TO BE LOCATED ON ANY EXTERIOR SURFACE. OPTIONAL CONSTRUCTION TO BE NO MATERIAL RECYCLING CODE.

3. MATING COMPONENTS OR EQUIVALENT:
   CONNECTOR 12047782

4. (2.3)X(0.1) RAISED DELPHI CORPORATE BRAND TO BE LOCATED ON ANY EXTERIOR SURFACE, PREFERABLY VISIBLE AT FINAL ASSEMBLY. OPTIONAL CONSTRUCTION TO BE "PED" OR NO LOGO.

(3) PROCESS SENSITIVE DIMENSION

DIMENSIONS ENCLOSED IN ( ) INDICATE REFERENCE DIMENSIONS AND NO TOLERANCE LIMITS ARE ESTABLISHED

R 0.1 MAX
R 0.2 MAX
SHARP CORNER TOLERANCE

DIMENSIONAL RANGE (MM)									CHART E1
FROM TO	> 0 20	> 20 30	> 30 70	> 70 100	>100 150	>150 200	>200 250	>250 300	>300 400
TOLERANCE UNLESS OTHERWISE SPECIFIED									
	±0.15	±0.2	±0.3	±0.4	±0.5	±0.6	±0.8	±1	±1.2
ANGULAR TOLERANCE ±2°									

DWG TYPE: PART DRAWING

STYLE

VOLUME (CM³): 0.133

DISTR CODE

ROUTING: 6900

UNLESS OTHERWISE SPECIFIED

THIS DOCUMENT IS IN ACCORDANCE WITH ASME Y14.5M-1994 AS AMENDED BY THE GM GLOBAL DIMENSIONING AND TOLERANCING ADDENDUM - 1997. ALL GEOMETRIC TOLERANCES AND RELATED DATUMS APPLY RFS. RULE #1(PERFECT FORM AT MMC) DOES NOT APPLY WHEN RELATIONSHIP BETWEEN FEATURES IS ESTABLISHED BY ORIENTATION OR LOCATION TOLERANCES. SEPARATE POSITION CALLOUTS MAY BE BASED SEPARATELY, REGARDLESS OF DATUM REFERENCE.

ALL DIMENSIONS ARE IN MILLIMETERS

REFERENCE

THIRD ANGLE PROJECTION

DO NOT SCALE

USE MATH DATA

UNIGRAPHICS

DELPHI

DELPHI PACKARD ELECTRIC SYSTEMS
WARREN,OH

		DATE
DR		
APVD1	T.L. BOZIS	26JN86
APVD2	T. MUDREY	07JL86
APVD3	R. MAGA	17JL86
APVD4		
APVD5		

SUBSTANCES OF CONCERN AND RECYCLED CONTENT PER DELPHI 10949001

MATERIAL
M4695003 PBT GRA

DRAWING NAME
TPA M/P 150

DRAWING NUMBER
12047784

SIZE	SCALE	FRAME NO	SHEET NO	STG	REV	N/P
A1	10:1	1 OF 1	1 OF 1	R	C2	-