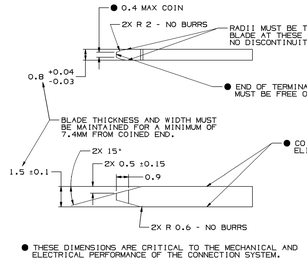

● THESE DIMENSIONS ARE CRITICAL TO THE MECHANICAL AND ELECTRICAL PERFORMANCE OF THE CONNECTION SYSTEM.

MATERIAL SPECIFICATIONS

RECOMMENDED

BASE METAL - CDA-210, EXTRA SPRING TEMPER

- TIN PLATING (WHERE APPLICABLE TO 125°C MAX CONTINUOUS USAGE): 0.0050±0.0025 MM (200±100 µIN) ELECTROPLATED TIN.
- USAGE OF PLATING TYPES OTHER THAN RECOMMENDED MUST BE APPROVED BY DELPHI PACKARD ELECTRIC SYSTEMS ENGINEERING.

MINIMUMS

ELECTRICAL CONDUCTIVITY - ≥28% IACS AT 20 °C. USE OF A MATERIAL WITH CONDUCTIVITY <28% IACS MUST BE APPROVED BY PACKARD ELECTRIC MATERIALS ENGINEERING.

TENSILE STRENGTH - 430 - 480 MPa

UNDERPLATING FOR TIN PLATING - FOR BASE MATERIALS CONTAINING 10% OR MORE ZINC, AN UNDERPLATE OF COPPER 0.0025 MM (100 µIN) MINIMUM THICK IS REQUIRED.

PROCESSING LUBRICANT - ANY PROCESSING LUBRICANT REMAINING ON TERMINALS MUST NOT VARNISH OR DEGRADE THE ELECTRICAL PERFORMANCE OF THE CONNECTION UP TO A MAXIMUM TEMPERATURE OF 150°C. PROCESSING LUBRICANTS MUST BE APPROVED BY DELPHI PACKARD ELECTRIC SYSTEMS ENGINEERING.

MATING BLADE INFORMATION

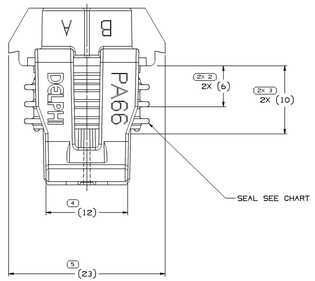

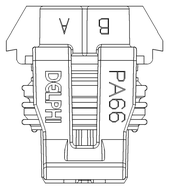

TYPE 102
SAME AS TYPE 101
EXCEPT AS SHOWN

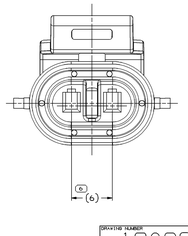

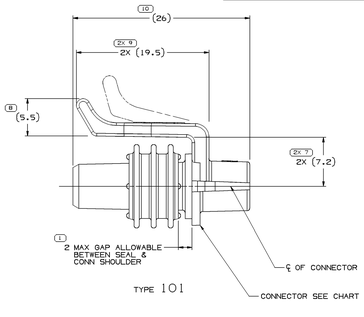

TYPE 101

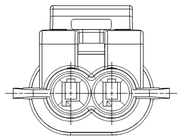

SYMBOL DEFINITION		
A DIMENSION WITHOUT AN INSPECTION REPORT SYMBOL (□) DOES NOT REQUIRE INSPECTION. IT MAY BE CONTROLLED ON THE INDIVIDUAL COMPONENT DRAWING.	TOTAL NO OF INSPECTIONS REQUIRED	14
	LAST NO. USED	10

MISSING SYMBOLS
NO MISSING SYMBOL NUMBER

KEY PRODUCT CHARACTERISTICS			
SAFETY/COMPLIANCE	FIT/FUNCTION	TOTAL ON DRAWING	3
S/C CHECKPOINTS	F/F CHECKPOINTS	LAST NO. USED	3

NO & TYPE	DESCRIPTION	RATIONALE	PTS	ZONE
15324696				

DWG STATUS					ZONE	REVISION HISTORY	AUTH	DR	APVD	APVD
DATE	STS	REV	N/P	CHG					1	2
11MY02	R	08	-	-	-	CLEARED REVISION COLUMN; ALL PARTS - REDRAWN TO PD	225/502	FRO	FRO	GM
06JN07	R	09	-	-	-	ALL PARTS - REVISED SEALING CODE NOTE; ADDED TYPE COLUMN TO CHART, REMOVED INSPECTION SYMBOLS FROM MATING CONNECTOR; ADDED TYPE 102 TOP VIEW	401608	MAC	MAC	SDG
22NO07	R	10	-	-	-	ALL PARTS - UPDATED POM ATTRIBUTES	402483	MAC	MAC	SLS
13MR13	R	11	-	-	-	12186685 - ADDED ADHESIVE NOTE AND INSPECTION SYMBOL (9 PLCS)	421738	IMF	JVW	JRV

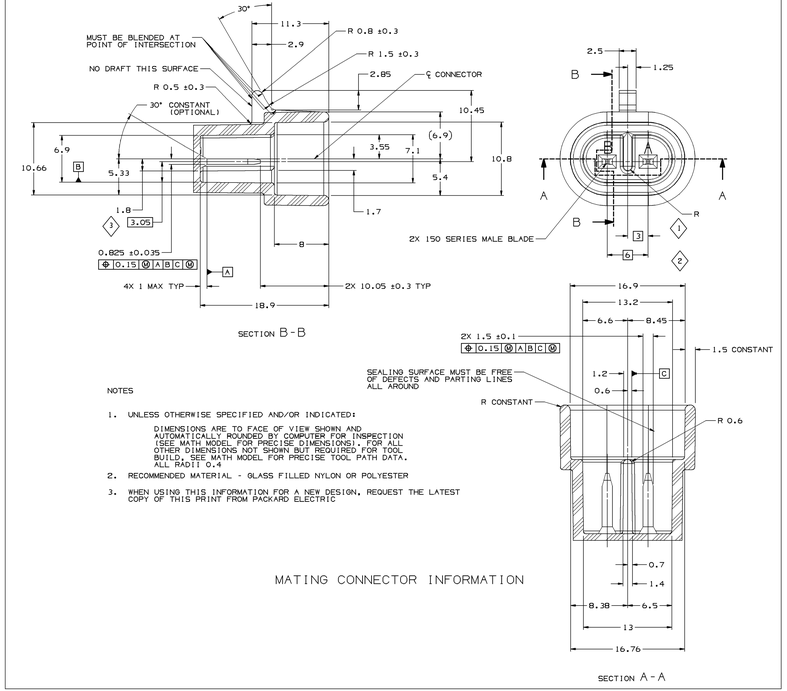

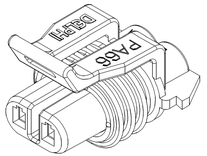

MATING CONNECTOR INFORMATION

NOTES

1. UNLESS OTHERWISE SPECIFIED AND/OR INDICATED:

   DIMENSIONS ARE TO FACE OF VIEW SHOWN AND AUTOMATICALLY ROUNDED BY COMPUTER FOR INSPECTION (SEE MATH MODEL FOR PRECISE DIMENSIONS). FOR ALL OTHER DIMENSIONS NOT SHOWN BUT REQUIRED FOR TOOL BUILD, SEE MATH MODEL FOR PRECISE TOOL PATH DATA. ALL RADII 0.4

2. RECOMMENDED MATERIAL - GLASS FILLED NYLON OR POLYESTER

3. WHEN USING THIS INFORMATION FOR A NEW DESIGN, REQUEST THE LATEST COPY OF THIS PRINT FROM PACKARD ELECTRIC

NOTES

1. UNLESS OTHERWISE SPECIFIED AND/OR INDICATED:

   DIMENSIONS ARE TO FACE OF VIEW SHOWN AND AUTOMATICALLY ROUNDED BY COMPUTER FOR INSPECTION (SEE MATH MODEL FOR PRECISE DIMENSIONS). FOR ALL OTHER DIMENSIONS NOT SHOWN BUT REQUIRED FOR TOOL BUILD, SEE MATH MODEL FOR PRECISE TOOL PATH DATA.

2. WHEN PARTS ARE SHIPPED THEY MUST BE PACKED IN PLASTIC BAGS OR SHIPPING CONTAINERS MUST BE LINED WITH PLASTIC LINERS. BAGS OR LINERS MUST BE SEALED TO AVOID FOREIGN MATTER.

3. SEALING CODE 3 - DESIGN WILL PASS SALT FOG AND IMMERSION TEST AFTER CONDITIONING AS SPECIFIED IN ESA-710 (METRI-PACK), WHEN MATED TO MATING PART OR EQUIVALENT

4. FOR APPLICATION DATA SEE THE INDIVIDUAL APPLICATION DRAWINGS.

5. THIS PRODUCT IS NOT CATEGORIZED AS AN APPEARANCE ITEM, MINOR IMPERFECTIONS INCLUDING, BUT NOT LIMITED TO, FLOW MARKS, COLOR BLEMISHES, GATE VESTIGE, AND SOFT FLASH THAT DO NOT AFFECT THE FIT, FORM, OR FUNCTION OF THE PART ARE PERMISSIBLE PER NAP 4.10-18.

6. FOR PART NUMBER WITH ADHESIVE, USE W3510001 OR ADHESIVE APPROVED BY MATERIALS ENGINEERING TO GLUE CONNECTOR SEAL TO CONNECTOR.

		15324696	A3	102	2	NONE	12052635	15305167	BLACK
		12129924	A3	101	2	NONE	12052635	12129925	BLACK
		12089501	B3	101	1	B	12089500	12103067	BROWN
12186685	A4	12052641	C4	101	2	NONE	12052635	12103067	BLACK
PART NO WITH ADHESIVE	REV	PART NO WITHOUT ADHESIVE	REV	TYPE	NUMBER OF CAVITIES	CAVITIES BLOCKED	CONNECTOR BODY	CONNECTOR SEAL	CONNECTOR COLOR

DIMENSIONAL RANGE (MM)									
FROM	0	3	30	120	315	1000	2000	4000	7000
TO	3	30	120	315	1000	2000	4000	7000	10000
TOLERANCE UNLESS OTHERWISE SPECIFIED									
±0.15	±0.2	±0.3	±0.5	±0.8	±1.2	±2	±3	±4	±5

GEOMETRIC TOLERANCE ISO

1 PROCESS SENSITIVE DIMENSION

DIMENSION ENCLOSED IN () INDICATE REFERENCE DIMENSION, NO GO TOLERANCE LIMITS ARE ESTABLISHED

THIRD ANGLE PROJECTION

DO NOT SCALE ONE WITH DATA

NX

THIS DRAWING IS THE PROPERTY OF DELPHI CORPORATION. PROVIDED THAT PHYSICAL PARTS ARE NOT AVAILABLE FOR ORDERING.

PART NUMBERS THAT DO NOT HAVE A LINE PRESENT INDICATE THAT PHYSICAL PARTS ARE AVAILABLE FOR ORDERING.

CONTACT DELPHI SALES TO ASSURE AVAILABILITY OF PARTS.

DWG TYPE PART DRAWING

STYLE

VALUE COP SEE CHART

SIZE CODE D

UNLESS OTHERWISE SPECIFIED

THIS DOCUMENT IS IN ACCORDANCE WITH ASME Y14.5M-1994 AS ADHERED TO IN GLOBAL STANDARDIZATION OF DELPHI PACKARD ELECTRIC. ALL DIMENSIONS, TOLERANCES AND RELATED SYSTEMS WILL BE ALL PLUS A MINIMUM FORM OF ±0.15 MM. ALL DIMENSIONS ARE TO BE MEASURED AT 20 DEGREES CENTIGRADE. INTERPRETATION OF DEVIATION TOLERANCES: ALL DIMENSIONS ARE TO BE MEASURED AT 20 DEGREES CENTIGRADE. REFERENCE OF OTHER REFERENCE: NO SHAPE DEPARTURE. ALL DIMENSIONS ARE IN MILLIMETERS

REFERENCE

THIS DRAWING IS THE PROPERTY OF DELPHI CORPORATION. PROVIDED THAT PHYSICAL PARTS ARE NOT AVAILABLE FOR ORDERING.

COPYRIGHT 1996 DELPHI CORPORATION, HELPER ITS AFFILIATES. ALL RIGHTS RESERVED.

THIS DRAWING IS THE PROPERTY OF DELPHI CORPORATION. IT IS PROVIDED ON THE CONDITION THAT IT WILL NOT BE REPRODUCED OR DISTRIBUTED TO ANY OTHER PERSON OR ORGANIZATION WITHOUT THE WRITTEN PERMISSION OF DELPHI CORPORATION. NEITHER THIS DRAWING NOR ANY PART THEREOF MAY BE REPRODUCED OR DISTRIBUTED WITHOUT EXPRESS AUTHORIZATION. IT IS PROHIBITED.

		DATE
DR		
APVD1	J. COLDSNOW	11APR9
APVD2	J. COLDSNOW	11APR9
APVD3	B. LANDRIES	14APR9
APVD4		
APVD5		

SUBSTRATES OF CONFORM AND RECYCLED CONTENT PER DELPHI (29450)

DRAWING NAME SEE CHART

DRAWING NAME TAXI ASM CONN 2 F M/P 150 SLD

DELPHI

DELPHI PACKARD ELECTRICAL/ELECTRONIC ARCHITECTURE

DELPHI, IN

DRAWING NUMBER 12089588

SIZE	SCALE	SHEET NO	SHEET NUM	PTS	REV	CHP
A1x3	511	1 OF 2	2 OF		R	11 -

DRAWING NUMBER 12089588

SIZE	SCALE	SHEET NO	SHEET NUM	PTS	REV	CHP
A1x3	511	2 OF 2	2 OF	R	11 -	

12089588