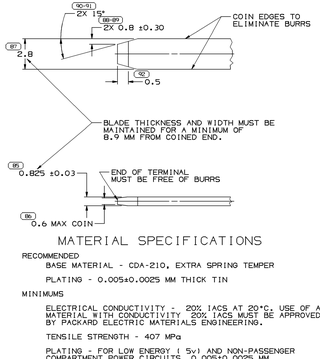


## MATERIAL SPECIFICATIONS

RECOMMENDED

BASE MATERIAL - CDA-210, EXTRA SPRING TEMPER

PLATING - 0.005±0.0025 MM THICK TIN

MINIMUMS

ELECTRICAL CONDUCTIVITY :- 20% IACS AT 20°C. USE OF A MATERIAL WITH CONDUCTIVITY 20% IACS MUST BE APPROVED BY PACKARD ELECTRIC MATERIALS ENGINEERING.

TENSILE STRENGTH - 407 MPa

PLATING - FOR LOW ENERGY ( 5v) AND NON-PASSENGER COMPARTMENT POWER CIRCUITS, 0.005±0.0025 MM THICK TIN. FOR MATERIALS CONTAINING 10% OR MORE ZINC, AN UNDERPLATE OF COPPER 0.005±0.0025 MM THICK IS REQUIRED.

## MATING BLADE INFORMATION

SCALE 8:1

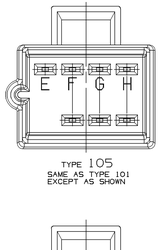


TYPE 105
SAME AS TYPE 101
EXCEPT AS SHOWN

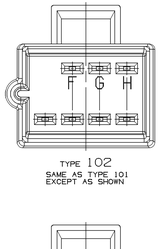


TYPE 102
SAME AS TYPE 101
EXCEPT AS SHOWN

TYPE 104
SAME AS TYPE 101
EXCEPT AS SHOWN

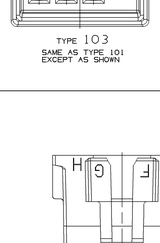


TYPE 103
SAME AS TYPE 101
EXCEPT AS SHOWN

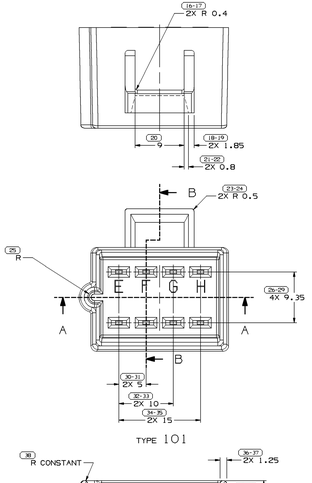


TYPE 101

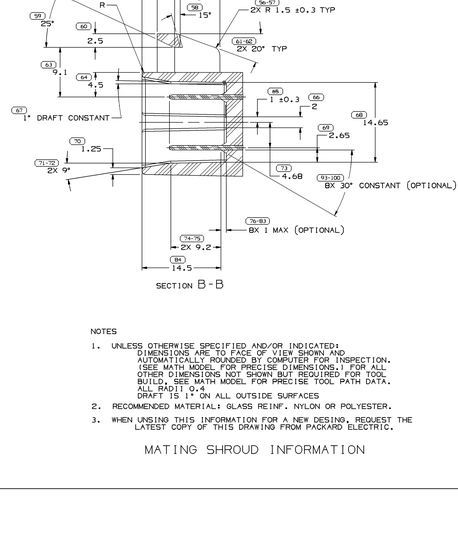


SECTION B-B

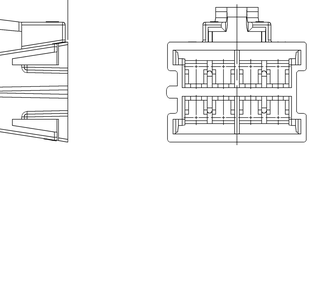


SECTION A-A

NOTES

1. UNLESS OTHERWISE SPECIFIED AND/OR INDICATED:
   DIMENSIONS ARE TO FACE OF VIEW SHOWN AND AUTOMATICALLY ROUNDED BY COMPUTER FOR INSPECTION. (SEE MATH MODEL FOR PRECISE DIMENSIONS.) FOR ALL OTHER DIMENSIONS NOT SHOWN BUT REQUIRED FOR TOOL BUILD, SEE MATH MODEL FOR PRECISE TOOL PATH DATA.
   ALL RADII 0.4
   DRAFT IS 1° ON ALL OUTSIDE SURFACES
2. RECOMMENDED MATERIAL: GLASS REINF. NYLON OR POLYESTER.
3. WHEN USING THIS INFORMATION FOR A NEW DESING, REQUEST THE LATEST COPY OF THIS DRAWING FROM PACKARD ELECTRIC.

## MATING SHROUD INFORMATION



TYPE 102
SAME AS TYPE 101
EXCEPT AS SHOWN



TYPE 105
SAME AS TYPE 101
EXCEPT AS SHOWN

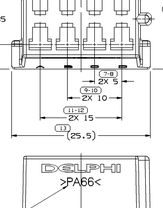




TYPE 103
SAME AS TYPE 101
EXCEPT AS SHOWN

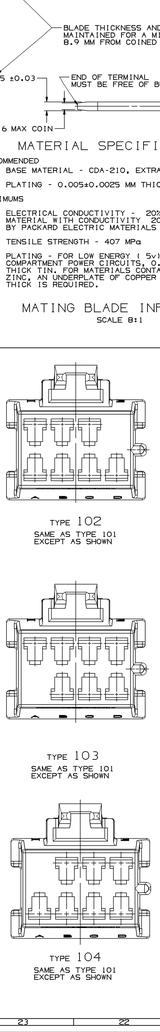

TYPE 104
SAME AS TYPE 101
EXCEPT AS SHOWN









NOTES

1. UNLESS OTHERWISE SPECIFIED AND/OR INDICATED:
   DIMENSIONS ARE TO FACE OF VIEW SHOWN AND AUTOMATICALLY ROUNDED BY COMPUTER FOR INSPECTION (SEE MATH MODEL FOR PRECISE DIMENSIONS.) FOR ALL OTHER DIMENSIONS NOT SHOWN BUT REQUIRED FOR TOOL BUILD, SEE MATH MODEL FOR PRECISE TOOL PATH DATA.
2. THIS PRODUCT IS NOT CATEGORIZED AS AN APPEARANCE ITEM, MINOR IMPERFECTIONS INCLUDING, BUT NOT LIMITED TO, FLOW MARKS, COLOR BLEMISHES, GATE VESTIGE, AND SOFT FLASH THAT DO NOT AFFECT THE FIT, FORM, OR FUNCTION OF THE PART ARE PERMISSIBLE PER DPNP-4.7-CS-01.
3. MATERIAL RECYCLING CODE PER ISO 11469, (2.3)X(0.1) CHARACTERS AS SHOWN TO BE LOCATED ON ANY EXTERIOR SURFACE.
4. (2.3)X(0.1) DELPHI CORPORATE BRAND TO BE LOCATED ON ANY EXTERIOR SURFACE, PREFERABLY VISIBLE AT FINAL ASSEMBLY. OPTIONAL CONSTRUCTION FOR EXISTING TOOLING MAY BE "PED".
5. FOR APPLICATION DATA SEE THE INDIVIDUAL APPLICATION DRAWINGS.



| | | | | | | |
|---|---|---|---|---|---|---|
| 15324959 | 01 | AC | POLYAMIDE COMPOUND GREEN | 105 | D | 3.892 |
| 15324771 | 02 | AC | POLYAMIDE COMPOUND BLUE | 104 | H | 3.892 |
| 15324408 | B3 | - | POLYAMIDE COMPOUND GREEN | 103 | A | 3.892 |
| 12162066 | B3 | - | POLYAMIDE COMPOUND GRAY | 101 | | 3.890 |
| 12160882 | E3 | - | POLYAMIDE COMPOUND BLUE | 102 | E | 3.894 |
| 12110216 | C3 | - | POLYAMIDE COMPOUND TELLOR | 101 | | 3.890 |
| 12089287 | E3 | - | POLYAMIDE COMPOUND NATURAL | 101 | | 3.890 |
| 12064998 | F4 | - | POLYAMIDE COMPOUND BLACK | 101 | | 3.890 |
| PART NO | REV | N/P | MATERIAL SPECIFICATION AND COLOR | TYPE | BLOCKED CAVITIES | VOL CM³ |

| SYMBOL DEFINITION | | MISSING NUMBERS |
|---|---|---|
| A DIMENSION WITHOUT AN INSPECTION REPORT SYMBOL [ ] DOES NOT REQUIRE INSPECTION. IT MAY BE CONTROLLED ON AN INDIVIDUAL COMPONENT DRAWING. | TOTAL NO. OF SYMBOLS ON DRAWING: 55 | |
| | LAST NO. USED: 100 | |

| DATE | STS | REV | N/P | DHE | ZONE | REVISION HISTORY | AUTH | DR | APVD | APVD 2 |
|---|---|---|---|---|---|---|---|---|---|---|
| 19APR99 | R | 01 | - | - | - | CLEARED REV COLUMN: 15324771 - RELEASED | 990005 | DMC | DMC | DG |
| 11APR99 | R | 02 | - | - | - | 15324771 - OBSOLETE | 990003 | AM | DMP | DG M |
| 27OCT99 | R | 03 | - | - | - | 15324959 - RELEASED | 990005 | CDV | DMC | DG |
| 25FEB00 | R | 04 | - | - | - | 15324771 - RELINSTATE | 000010 | JIB | JIB | JA |
| 23MAR00 | R | 05 | - | - | - | 15324771 - MAT'L SPEC WAS R0100214 PBT HG 1M-BRN | 001481 | DMP | DMP | JA |
| 09AR01 | R | 06 | - | - | - | 12064998 - UPDATED PDM ATTRIBUTES | 215043 | MRL | MRL | DLB |
| 29JL03 | R | 07 | - | - | - | ALL PARTS - ADDED DELPHI LOGO AND REVISED MAT'L SPEC | 243627 | JTD | DJV | RC |
| 25JN04 | R | 08 | - | - | - | ALL PARTS - TERMINAL 12066214 WAS 12015857 IN NOTE 2 | 256461 | RH | RH | TM |
| 05FE15 | R | 09 | - | - | - | ALL PARTS - ADDED APPLICATION DATA NOTE | 428746 | ABH | JVM | JFF |

| DRAWING NUMBER | SIZE | SCALE | PAGE SET | SHEET SET | SHEET | REV | N/P |
|---|---|---|---|---|---|---|---|
| 12089288 | A1x3 | 4:1 | 2 OF 2 | 1 OF 1 | R | 09 | - |

THIS DRAWING IS THE PROPERTY OF DELPHI CORPORATION. PROVIDED THAT PHYSICAL PARTS ARE NOT AVAILABLE FOR ORDERING.

PART NUMBERS THAT DO NOT HAVE A LINE PRESENT INDICATE THAT PHYSICAL PARTS ARE AVAILABLE FOR ORDERING.

CONTACT DELPHI SALES TO ASSURE AVAILABILITY.

DWG TYPE: PART DRAWING

STYLE

VALUE COP: SEE CHART

SIZE: D

UNLESS OTHERWISE SPECIFIED

THIS DOCUMENT IS IN ACCORDANCE WITH ASME Y14.5M-1994 AS INTERPRET BY THE IN GLOBAL DIMENSIONING AND TOLERANCING STANDARD. ALL DIMENSIONS AND TOLERANCES OF FEATURES MAY BE MODIFIED DEPENDENT PER-MANUFACTURE OF SYSTEM REFERENCES.

ALL DIMENSIONS ARE IN MILLIMETERS

REFERENCE

THIRD ANGLE PROJECTION

DO NOT SCALE ONE MATH DATA

NDX

DELPHI
DELPHI PACKARD ELECTRICAL/ELECTRONIC ARCHITECTURE
WARREN, OH

COPYRIGHT 1998 DELPHI CORPORATION, HELM/ OR ITS AFFILIATES. ALL RIGHTS RESERVED.

THIS DRAWING IS THE PROPERTY OF DELPHI CORPORATION OR ITS AFFILIATES. IT MAY NOT BE REPRODUCED OR DISCLOSED TO OTHERS WITHOUT WRITTEN AUTHORIZATION FROM DELPHI CORPORATION OR ITS AFFILIATES. IN WHOLE OR IN PART, OR USED FOR ANY OTHER PURPOSE WITHOUT EXPRESS AUTHORIZATION, IS PROHIBITED.

| | | DATE |
|---|---|---|
| DR | | |
| APVD1 | C. MOLINA | 09SEP99 |
| APVD2 | R. CHACON | 09SEP99 |
| APVD3 | O. GALLEGOS | 09SEP99 |
| APVD4 | | |
| APVD5 | | |

SUBSTANCES OF CONCERN: NO RECYCLED CONTENT PER DELPHI (294802)

DRAWING NAME: SEE CHART

DRAWING NAME: TAXI CONN F M/P 280

| DRAWING NUMBER | SIZE | SCALE | PAGE SET | SHEET SET | SHEET | REV | N/P |
|---|---|---|---|---|---|---|---|
| 12089288 | A1x3 | 4:1 | 1 OF 2 | 1 OF 1 | R | 09 | - |

12089288