DO NOT SCALE

PART NO. 1208 4492

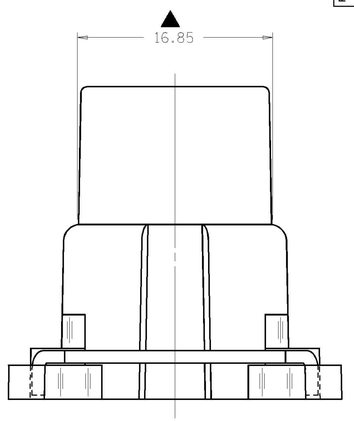

PART NO. 1208 4492

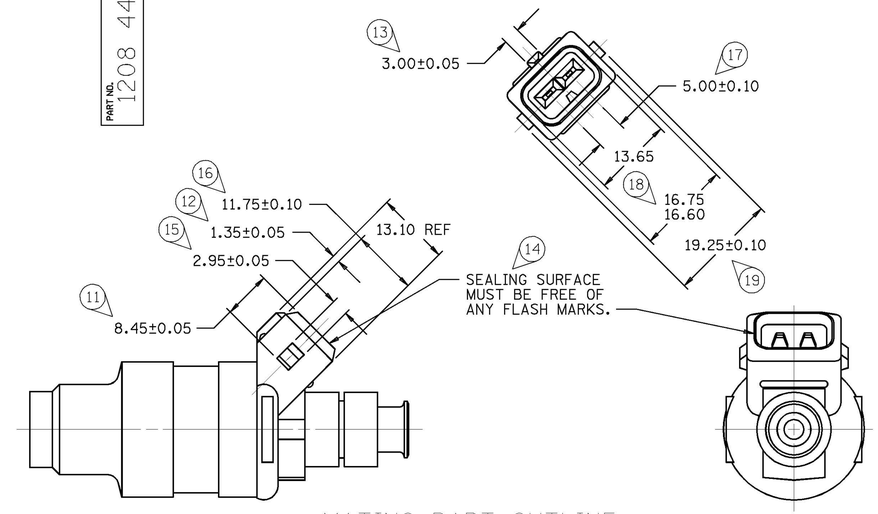

MATING PART OUTLINE

(FUEL INJECTOR-
R.P.D. P/N 5235126 OR EQUIVALENT)

DATE	SYM	REVISION RECORD	AUTHORITY	DR	CK
02N088	—	12065455-REDRAWN FROM SEPARATE			
		"D" SIZE WITH NO PHYSICAL CHANGE			
		THRU REV "B"; CABLE SEAL NOTE			
		REVISED	122924	JW	
02N088	—	12084428-RELEASED TO REV "A"	880005	JN	
10SE90	—	ALL PARTS - ADDED DIMS (2 PLCS) &			
		RELOCATED CAVITY LETTERS - NO REV			
		UPDATE REQ'D	136982	JC	JC
27OC90	—	CONN SEAL WAS 12059214 - ALL			
		PARTS - REV LEVEL ADVANCED	138255	WLS	ATL
20MY91	—	12065455 & 12084428 OBSOLETE	910003	TS	FH
20MY91	—	12129140 & 12129142 RELEASED TO REV "A"	910005	TS	FH
13MY92	—	12110179 - RELEASED TO REV "A"	920005	BAR	BAR
12SE97	—	ALL PARTS - ADDED NOTE #9	181384	GLH	GLH
03JA14	—	ALL ACTIVE PARTS - ADDED	424986	JVR	KRM
		LUBEWELL LUBRICANT NOTE			

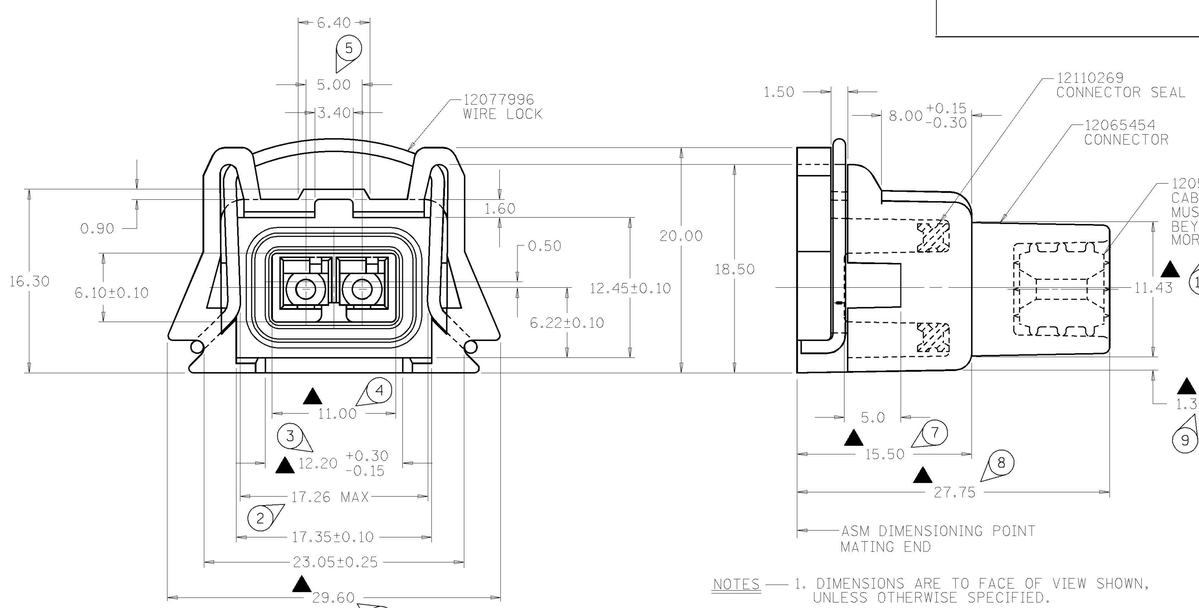

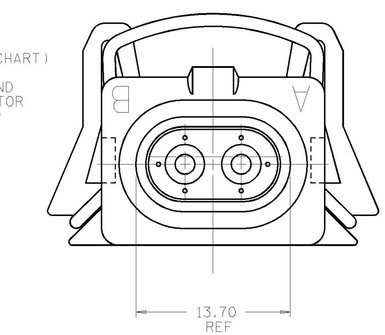

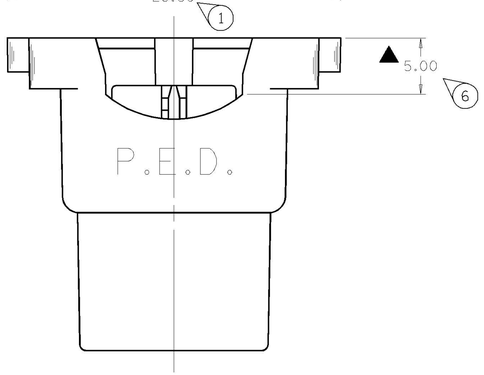

NOTES —

1. DIMENSIONS ARE TO FACE OF VIEW SHOWN, UNLESS OTHERWISE SPECIFIED.
2. CAVITIES TO ACCEPT TERMINAL 12077939 OR EQUIVALENT.
3. CONNECTOR MATES TO PRIMARY FUEL INJECTOR R.P.D. P/N 5235126 OR EQUIVALENT.
4. WHEN PARTS ARE SHIPPED, THEY MUST BE PACKED IN PLASTIC BAGS OR SHIPPING CONTAINERS MUST BE LINED WITH PLASTIC LINERS. BAGS AND LINERS MUST BE SEALED TO AVOID ENTRY OF FOREIGN MATTER.
5. DIMENSIONS CONTROLLED FOR AUTOMATIC FEEDING AS DENOTED ON DRAWING WITH "▲".
6. FOR LEAD LENGTH CALCULATIONS, DISTANCE FROM MATING END OF CONNECTOR TO FRONT OF CABLE CORE IS 13.00±1.50.
7. SEALING CODE 2.
8. "◯" DENOTES DIMENSIONS AND CHARACTERISTICS THAT ARE IMPORTANT TO THE FUNCTION AND/OR PROCESSING OF THE PART. IT DOES NOT NECESSARILY INDICATE AN S.P.C. DIMENSION. THIS DRAWING HAS 19 SNOWCONES.
9. REFER TO VPS #B-53 METRI-PACK 280.1 PTS CONNECTOR SEAL.
10. S-60-T LUBEWELL LUBRICANT CAN BE USED AS AN AUXILIARY SUPPORT ON THE CABLE INSTALLATION PROCESS.

PART NO.	REV	CABLE SEAL P/N & COLOR
12129142	A1	12059215 - GREY
12129140	A1	12084427 - PURPLE
12110179	A1	12110178 - ORN RED
12084428	B	12084427 - PURPLE
12065455	C	12059215 - GREY

PACKARD ELECTRIC DIVISION
GENERAL MOTORS CORPORATION
WARREN, OHIO

106V
96V

PED/INTERGRAPH EMS

FILE SPEC: ◆◆◆◆USER◆◆◆◆ DGN◆SPECIFICATION◆◆◆◆◆◆◆◆◆◆◆◆ ◆◆◆◆◆SYTIME◆◆◆◆◆◆

THIRD ANGLE PROJECTION

METRIC
DIMENSIONS ARE IN MILLIMETERS UNLESS OTHERWISE SPECIFIED.

CODE NO. 6900

TOLERANCE UNLESS OTHERWISE SPECIFIED
DECIMAL: ONE PLACE ± 0.3, TWO PLACE ± 0.15
ANGULAR ±2°

Q.C. -C-5152,MFG-C-8013

DWG. DATE 02N088 | SCALE NONE | DR. JAY NEFF 02N088

EST. NO. | CK. | DATE

REFERENCE NO. | APPR. R.J.CANNATTI | DATE 08N088

APPR. | DATE

MATERIAL SPEC. SEE DRAWING

NAME ASM CONN 2F M/P 280.1 P2S

PART NO. 1208 4492 | SIZE D

PACKARD ELECTRIC