FILE NO.	B-CD-201-02

NOTES:

① MAT'L: COPPER (STOCK TKN. $\frac{.031}{.79}^{\pm.001}$)

PLATING: ELECTRO-TIN (.0003 MIN.)

② INSULATION: MOLDED PVC (BLUE)

STUD SIZES: (±.005)

02 = .094
04 = .119
06 = .146
08 = .173
10 = .198
14 = .265
56 = .328
38 = .390

"UL" LISTING #E32244
"CSA" LISTING #18689

ALL DIMENSIONS = $\frac{\text{INCHES}}{\text{MM}}$

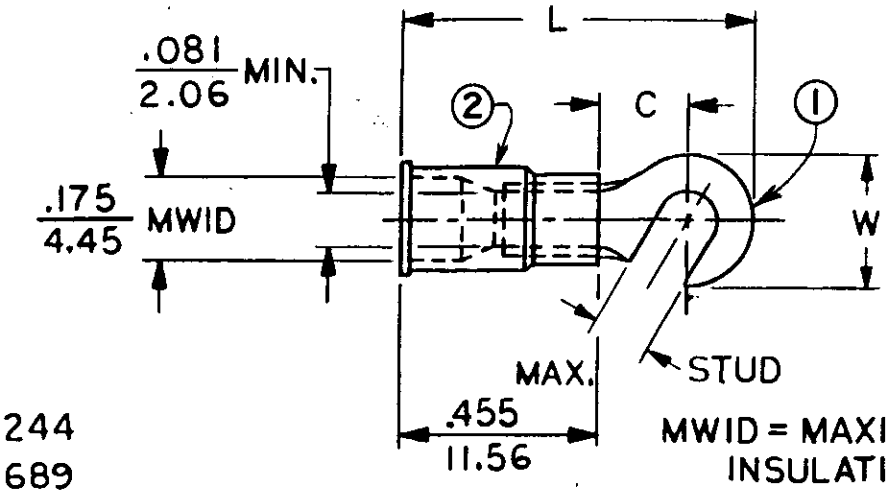

MWID = MAXIMUM WIRE INSULATION DIAMETER

WIRE SIZE: 16-14 AWG / 1.0-2.5 MM²

PART NUMBER	"W" ±.010	"C" MIN.	"L" MAX.				AVAILABLE STUD SIZES	
B-219-	.350 / 8.89	.271 / 6.88	.948 / 24.08				06X, 08X, 10X	

DIMENSIONAL TOLERANCES UNLESS OTHERWISE SPECIFIED			REFERENCE	SCALE: NTS	DATE	TITLE: HOOK TONGUE TERMINAL INSULKRIMP 200 SERIES	ETC molex INCORPORATED
FRAC.	DEC.	ANG.		DRWN. BY: KO	10-25-84		
±	±	±		CHKD. BY: GZ	11-3-84		DWG. NO. A CUSTOMER DWG.
				APPRD. BY:			