LOOSE PIECE		TAPE MOUNTED		DIMENSIONS										FINISH
MATERIAL NUMBER	ENGINEERING NUMBER	MATERIAL NUMBER	ENGINEERING NUMBER	STUD SIZE	S ±.005	W MAX	C MIN	ID MIN	MWID	B REF	L MAX	H REF	T REF	INSULATION COLOR
191250003	A-515-06	191250004	A-515-06T	6	.146/3.71	.301/7.6	.207/5.3	.054/1.37	.138/3.51	.536/13.61	.927/23.55	.08/2.0	.031/0.79	RED
191250005	A-515-08	191250006	A-515-08T	8	.173/4.39	.301/7.6	.207/5.3	.054/1.37	.138/3.51	.536/13.61	.927/23.55	.08/2.0	.031/0.79	RED
191250007	A-515-10	191250008	A-515-10T	10	.198/5.03	.301/7.6	.207/5.3	.054/1.37	.138/3.51	.536/13.61	.927/23.55	.08/2.0	.031/0.79	RED
191250033	B-516-06	191250034	B-516-06T	6	.146/3.71	.301/7.6	.209/5.3	.081/2.06	.165/4.19	.536/13.61	.936/23.77	.08/2.0	.031/0.79	BLUE
191250035	B-516-08	191250036	B-516-08T	8	.173/4.39	.301/7.6	.209/5.3	.081/2.06	.165/4.19	.536/13.61	.936/23.77	.08/2.0	.031/0.79	BLUE
191250037	B-516-10	191250038	B-516-10T	10	.198/5.03	.301/7.6	.209/5.3	.081/2.06	.165/4.19	.536/13.61	.936/23.77	.08/2.0	.031/0.79	BLUE
191250074	C-517-06	191250075	C-517-06T	6	.146/3.71	.345/8.8 (A)	.270/6.85 (A)	.128/3.25	.225/5.71	.669/16.99	1.165/29.6 (A)	.10/2.5	.040/1.02	YELLOW
191250076	C-517-08	191250077	C-517-08T	8	.173/4.39	.385/9.8	.270/6.85 (A)	.128/3.25	.225/5.71	.669/16.99	1.165/29.6 (A)	.10/2.5	.040/1.02	YELLOW
191250078	C-517-10	191250079	C-517-10T	10	.209/5.3 (A)	.385/9.8	.270/6.85 (A)	.128/3.25	.225/5.71	.669/16.99	1.165/29.6 (A)	.10/2.5	.040/1.02	YELLOW

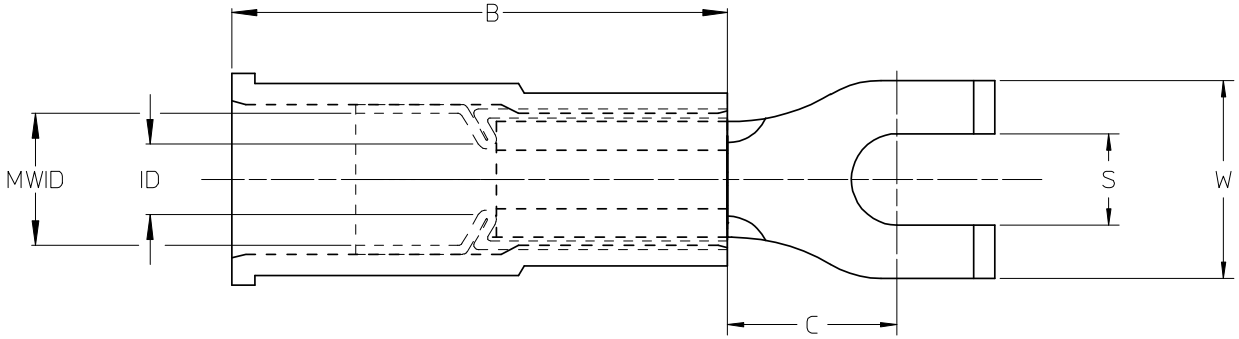

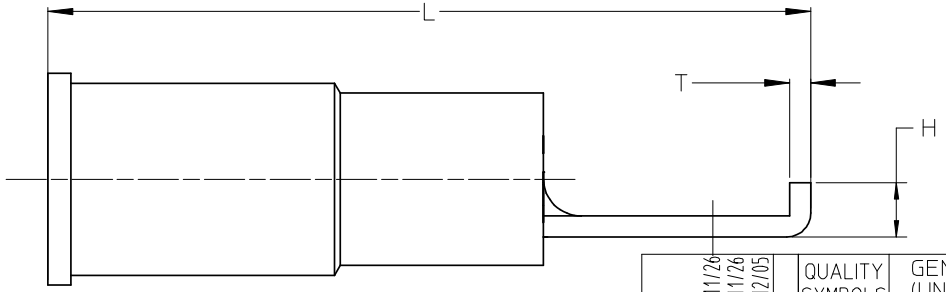

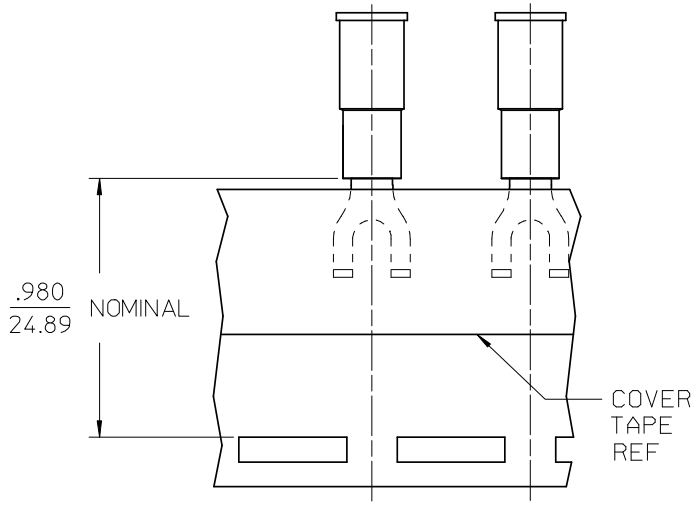

PARTS ON TAPE

SALES DRAWING

NOTES:
1. MATERIAL: COPPER
2. PLATING: ELECTRO-TIN
3. MWID = MAXIMUM WIRE INSULATION DIAMETER
4. PART IS RoHS COMPLIANT

STANDARDIZE
EC NO: ETC2008-0012 2007/11/26
DRWN:RSTONE 2007/11/26
CH'KD:JMACNEIL 2007/11/26
APPR:JMACNEIL 2007/12/05
DESCRIPTION
REV A

QUALITY SYMBOLS
▼=0
(C)=0

GENERAL TOLERANCES (UNLESS SPECIFIED)

	mm	INCH
4 PLACES	± ---	± ---
3 PLACES	± ---	± .005
2 PLACES	± 0.13	± .01
1 PLACE	± 0.25	± ---
ANGULAR ±1/2°		

DRAFT WHERE APPLICABLE MUST REMAIN WITHIN DIMENSIONS

DIMENSION STYLE: IN/MM
SCALE: ---
DESIGN UNITS: INCH
THIRD ANGLE PROJECTION

DRAWN BY: JJ DATE: 1984/11/14
CHECKED BY DATE
APPROVED BY DATE

TITLE: FLANGED SPADE TERMINAL, AVIKRIMP -500 SERIES,

molex MOLEX INCORPORATED

MATERIAL NO.: SEE CHART
DOCUMENT NO.: SD-19125-001
SHEET NO.: 1 OF 1
SIZE: B

THIS DRAWING CONTAINS INFORMATION THAT IS PROPRIETARY TO MOLEX INCORPORATED AND SHOULD NOT BE USED WITHOUT WRITTEN PERMISSION