Thick Film Chip Resistors

CR Series

MERITEK

Feature and Applications

- Excellent mechanical strength and electrical stability
- Ideal for pick and place machinery
- Stable high frequency characteristics
- Miniature, high board density
- Equivalent specification EIAJ- RC- 2690,
- EIAJ- RC- 1009B, EIA- RS- 481A

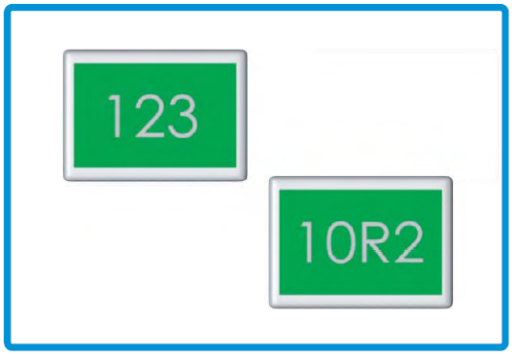

Part Numbering System

CR 10 1002 F -13

Thick Film Chip Resistor

Code	01	02	04	08	10	16	20	25
Size	2512	2010	1210	1206	0805	0603	0402	0201

Resistance Value

5%	3 digits. First 2 are significant, Third is multiplier (10_x)
1%	4 digits. First 3 are significant, Forth is multiplier (10_x)
000 = Jumper “0” ohm “R” indicates decimal on value	

Tolerance

Code	F	J
Tolerance	±1%	±5%

Packaging

Code	Blank	-13
Packaging	Standard 7” Reel	13” Reel

Lake-View Electronics Corp. 1054 Pioneer Rd. Grafton, WI Ph: 262-377-8250 Fax: 262-375-0109

www.lvelectronics.com Email: sales@lvelectronics.com

General Specifications

Resistance Range: ≥1Ω

Type No	Rated Power at 70ºC	Max. Working Voltage	Max. Overload Voltage	TCR (ppm / °C)	Resistance Range B (± 0.1%) E-24 , E-96	D (± 0.5%) E-24 , E-96	F (± 1%) E-24 , E-96	G (± 2%), J (± 5%) E-24	Jumper Rated Current J (± 5%)	Jumper Rated Current F (± 1%)	Jumper Resistance Value J (± 5%)	Jumper Resistance Value F (± 1%)
CR25 (0201)	1/20W	25V	50V	-200 +400	--	1Ω≤R<10Ω	1Ω≤R<10Ω	1Ω≤R<10Ω	0.5A	0.5A	50mΩ MAX	35mΩ MAX
				±200	--	10Ω≤R≤10MΩ	10Ω≤R≤10MΩ	10Ω≤R≤10MΩ				
CR20 (0402)	1/16W	50V	100V	±100	100Ω≤R≤1MΩ	10Ω≤R≤1MΩ	10Ω≤R≤22MΩ	10Ω≤R≤22MΩ	1A	1.5A	50mΩ MAX	20mΩ MAX
				±200	--	--	1Ω≤R<10Ω	1Ω≤R<10Ω				
CR16 (0603)	1/10W	75V	150V	±100	100Ω≤R≤1MΩ	10Ω≤R≤1MΩ	10Ω≤R≤22MΩ	10Ω≤R<22MΩ	1A	2A	50mΩ MAX	20mΩ MAX
				±200	--	1Ω≤R<10Ω	1Ω≤R<10Ω	1Ω≤R<10Ω				
CR10 (0805)	1/8W	150V	300V	±100	100Ω≤R≤1MΩ	10Ω≤R≤1MΩ	10Ω≤R≤27MΩ	10Ω≤R≤27MΩ	2A	2.5A	50mΩ MAX	20mΩ MAX
				±200	--	1Ω≤R<10Ω	1Ω≤R<10Ω	1Ω≤R<10Ω				
CR08 (1206)	1/4W	200V	400V	±100	100Ω≤R≤1MΩ	10Ω≤R≤1MΩ	10Ω≤R≤27MΩ	10Ω≤R≤27MΩ	2A	3.5A	50mΩ MAX	20mΩ MAX
				±200	--	1Ω≤R<10Ω	1Ω≤R<10Ω	1Ω≤R<10Ω				
CR04 (1210)	1/2W	200V	400V	±100	100Ω≤R≤1MΩ	10Ω≤R≤1MΩ	10Ω≤R≤27MΩ	10Ω≤R≤27MΩ	2A	4A	50mΩ MAX	20mΩ MAX
				±200	--	--	1Ω≤R<10Ω	1Ω≤R<10Ω				
CR02 (2010)	3/4W	200V	400V	±100	100Ω≤R≤1MΩ	10Ω≤R≤1MΩ	10Ω≤R≤20MΩ	10Ω≤R≤20MΩ	2A	5A	50mΩ MAX	20mΩ MAX
				±200	--	--	1Ω≤R<10Ω	1Ω≤R<10Ω				
CR01 (2512)	1W	200V	400V	±100	100Ω≤R≤1MΩ	10Ω≤R≤1MΩ	10Ω≤R≤20MΩ	10Ω≤R≤20MΩ	2A	7A	50mΩ MAX	20mΩ MAX
				±200	--	--	1Ω≤R<10Ω	1Ω≤R<10Ω				
Operating Temperature Range				-55ºC ~ +155ºC (0201: -55ºC ~ +125ºC)								

Resistance Range: <1Ω

Item / Type	Power Rating at 70°C	Operating Temp. Range	Resistance Range (mΩ) ±1%	Resistance Range (mΩ) ±5%	TCR (PPM/°C)
CR20(0402)	1/16W	-55 ~ +155°C	50 - 91 100 - 976		±800 ±500
CR16(0603)	1/10W	-55 ~ +155°C	20 - 47 50 - 91 100 - 976		±1200 ±800 ±500
CR10(0805)	1/8W	-55 ~ +155°C	10 - 18 20 - 47 50 - 91 100 - 976		±1500 ±1200 ±800 ±500
CR08(1206)	1/4W	-55 ~ +155°C			
CR04(1210)	1/3W	-55 ~ +155°C	10 - 18 20 - 91 100 - 976		±1500 ±800 ±500
CR02(2010)	3/4W	-55 ~ +155°C			
CR01(2512)	1W	-55 ~ +155°C			

Dimensions

Resistance Range: ≥1Ω

Dimensions / Type	Dimensions in millimeters (mm)				
	L	W	H	L1	L2
CR25 (0201)	0.60± 0.03	0.30± 0.03	0.23± 0.03	0.15± 0.05	0.15± 0.05
CR20 (0402)	1.00± 0.10	0.50± 0.05	0.30± 0.05	0.20± 0.10	0.25± 0.10
CR16 (0603)	1.60± 0.10	0.80± 0.10	0.45± 0.10	0.30± 0.15	0.30± 0.15
CR10 (0805)	2.00± 0.10	1.25± 0.10	0.50± 0.10	0.35± 0.20	0.35± 0.15
CR08 (1206)	3.05± 0.10	1.55± 0.10	0.55+0.10/-0.05	0.45± 0.20	0.35± 0.15
CR04 (1210)	3.05± 0.10	2.55± 0.10	0.55± 0.10	0.50± 0.20	0.50± 0.20
CR02 (2010)	5.00± 0.20	2.50± 0.20	0.55± 0.10	0.60± 0.20	0.60± 0.20
CR01 (2512)	6.30± 0.20	3.20± 0.20	0.55± 0.10	0.60± 0.20	0.60± 0.20

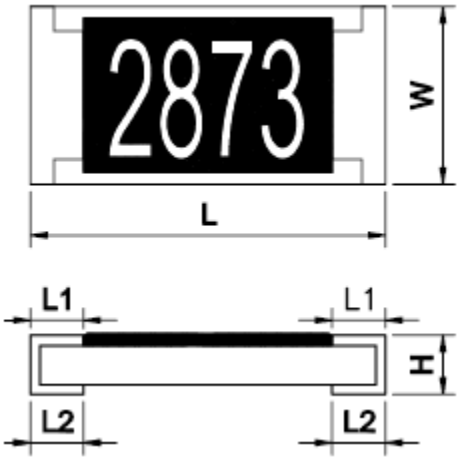

Dimensions

Resistance Range: <1Ω

Dimensions / Type	Dimensions in millimeters (mm)				
	L	W	H	L1	L2
CR20 (0402)	1.00± 0.10	0.50± 0.05	0.35± 0.10	0.25± 0.10	0.20± 0.15
CR16 (0603)	1.60± 0.10	0.80± 0.10	0.45± 0.10	0.25± 0.15	0.35± 0.15
CR10 (0805)	2.00± 0.10	1.25± 0.10	0.50± 0.10	0.35± 0.20	0.35± 0.20
CR08 (1206)	3.05± 0.10	1.55± 0.10	0.50± 0.10	0.45± 0.20	0.65± 0.15
CR04 (1210)	3.05± 0.10	2.55± 0.10	0.55± 0.10	0.50± 0.20	0.50± 0.20
CR02 (2010)	5.00± 0.20	2.50± 0.20	0.60± 0.10	0.65± 0.20	0.65± 0.20
CR01 (2512)	6.30± 0.20	3.20± 0.20	0.60± 0.10	0.65± 0.20	0.65± 0.20

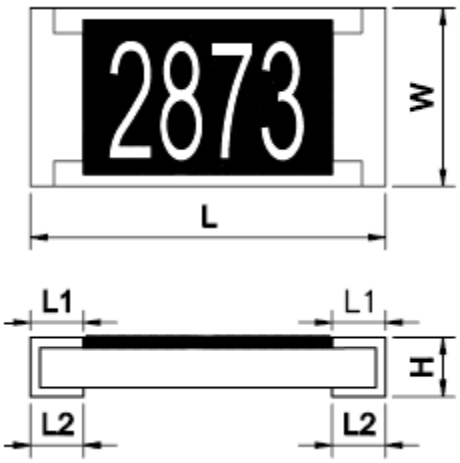

Structure Graph

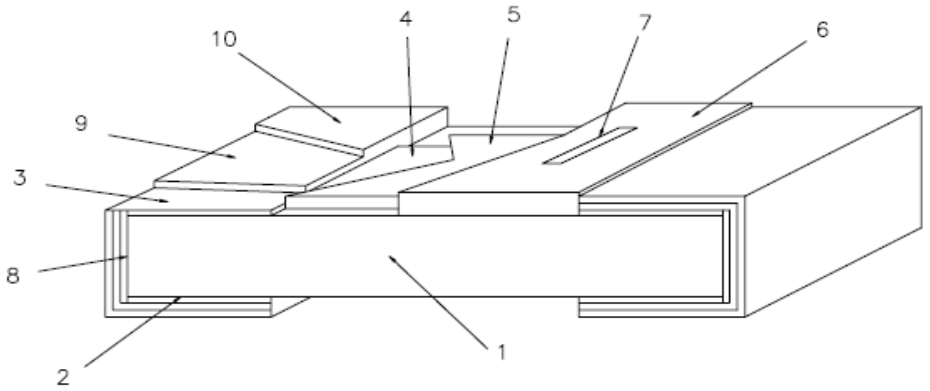

1	Ceramic substrate	6	2nd Protective coating
2	Bottom inner electrode	7	Marking
3	Top inner electrode	8	Terminal inner electrode
4	Resistive layer	9	Ni plating
5	1st Protective coating	10	Sn plating

Reflow Soldering Profile

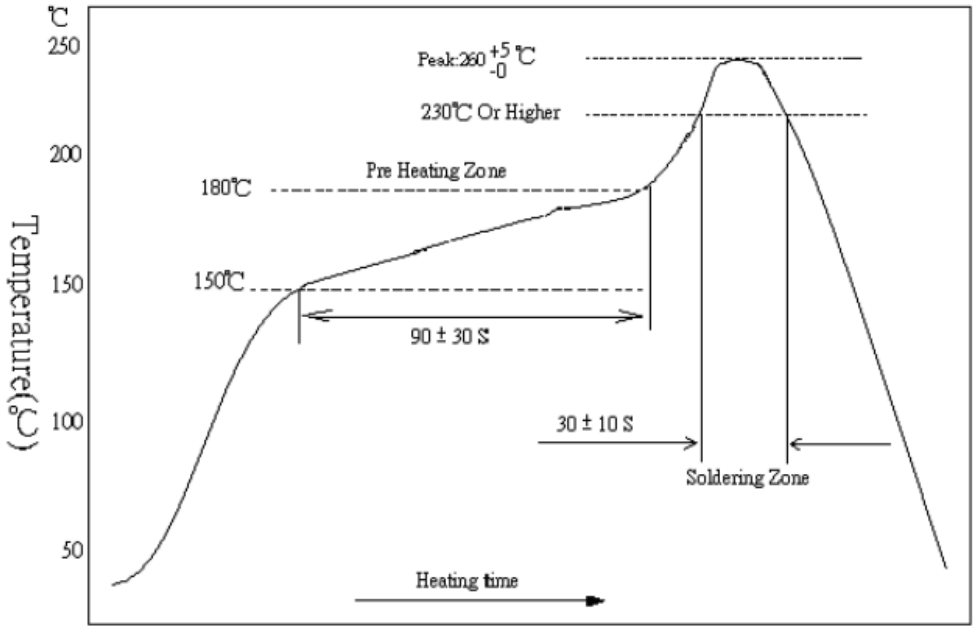

Tape Dimensions

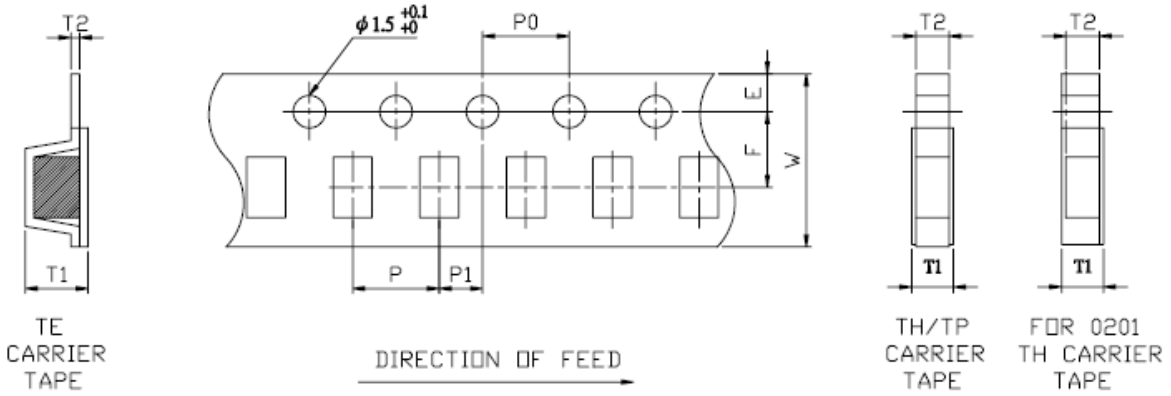

Unit: mm

Type	A	B	W	E	F	T1	T2	P	P0	10 X P0	P1
CR25(0201)	0.68±0.03	0.38±0.03	8.00±0.10	1.75±0.10	3.50±0.05	0.45±0.10/-0	0.28±0.02	2.00±0.05	4.00±0.05	40.00±0.20	2.00±0.05
CR20(0402)	1.15±0.05	0.65±0.05	8.00±0.20	1.75±0.10	3.50±0.05	0.45+0.20/-0	0.45±0.05	2.00±0.10	4.00±0.05	40.00±0.20	2.00±0.05
CR16(0603)	1.80±0.10	1.00±0.10	8.00±0.20	1.75±0.10	3.50±0.05	0.60+0.20/-0	0.60±0.10	4.00±0.10	4.00±0.05	40.00±0.20	2.00±0.05
CR10(0805)	2.30±0.10	1.55±0.10	8.00±0.20	1.75±0.10	3.50±0.05	0.75+0.20/-0	0.75±0.10	4.00±0.10	4.00±0.05	40.00±0.20	2.00±0.05
CR08(1206)	3.50±0.20	1.90±0.20	8.00±0.20	1.75±0.10	3.50±0.05	0.75+0.20/-0	0.75±0.10	4.00±0.10	4.00±0.05	40.00±0.20	2.00±0.05
CR04(1210)	3.50±0.20	2.80±0.20	8.00±0.20	1.75±0.10	3.50±0.05	0.75+0.20/-0	0.75±0.10	4.00±0.10	4.00±0.05	40.00±0.20	2.00±0.05
CR02(2010)	5.50±0.20	2.80±0.20	12.00±0.20	1.75±0.10	5.50±0.05	0.85±0.15	0.23±0.15	4.00±0.10	4.00±0.05	40.00±0.20	2.00±0.05
CR01(2512)	6.70±0.20	3.40±0.20	12.00±0.20	1.75±0.10	5.50±0.05	0.85±0.15	0.23±0.15	4.00±0.10	4.00±0.05	40.00±0.20	2.00±0.05

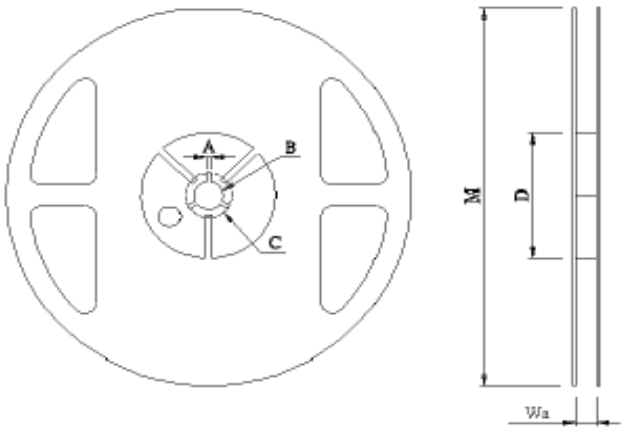

Unit: mm

Reel Type/ Tape	Wa	M	A	B	C	D
7” reel for 8 mm tape	9.0 ± 0.5	178 ± 2.0	2.0 ± 0.5	13.5 ± 0.5	21.0 ± 0.5	60.0 ± 1.0
7” reel for 12 mm tape	13.8 ± 0.5	178 ± 2.0				80.0 ± 1.0
13” reel for 8 mm tape	10.0 ± 0.5	330 ± 2.0				100.0 ± 1.0

Packaging

Type	Tape Width	Packaging QTY (pcs / reel)				
		2 mm Pitch		4 mm Pitch		4 mm Pitch
Reel Type		7”	13”	7”	13”	7”
CR25	8 mm	10,000	50,000			
CR20	8 mm	10,000	50,000			
CR16	8 mm			5,000	20,000	
CR10	8 mm					
CR08	8 mm					
CR04	8 mm					
CR02	12 mm					4,000
CR01	12mm					4,000