Series 15

Features

- Snap fits into 1.125" x .550" panel cutout
- LED, incandescent and neon illumination
- Matte Finish
- Dummy (hole plugs)available

Specifications

• Body Material:	Nylon
• Lens Material:	Polycarbonate
• Terminals:	.250 Tabs
• Panel Thickness:	.025 to .187
• Certifications:	Contact Us

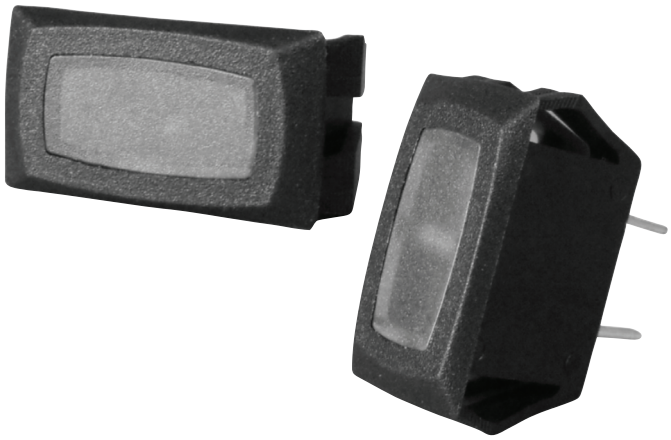

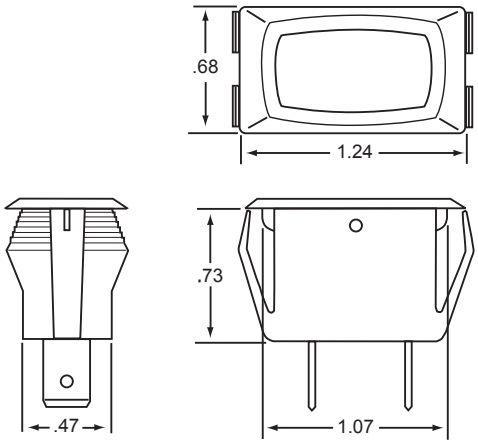

Series	Lamp			Termination		Base		Bezel		Lens		
XX		XX	–	X	–	X		X	–	XXX		X 0
	Voltage	Type	Code	Style	Code	Color	Code	Finish	Code	Style	Code	
15	N/A	DUMMY	00	N/A	0	White	1	N/A	0	Flush Translucent [1]	121	
	2	LED	10	.250 Tabs	4	Black	2			Flush Frost	124	
	6	INCAND	32									
	14	INCAND	35									
	28	INCAND	39									
	125	NEON	50									
	250	NEON	52									
		Special	XX									

Color	Plain
Red	1
Amber	2
Clear [2]	3
Green	4
Blue	5
White	6
Black	7

Color	Marked
Red	A
Amber	B
Clear [2]	C
Green	D
Blue	E
White	F

Panel Cutout

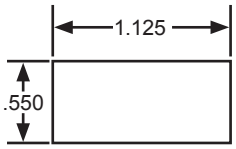

White is Translucent
Clear is Transparent

Additional Options Available:
Contact Factory

1. Translucent Lens is not recommended for use with LED
2. Specify LED Color